ALY001MA

安全煞車器-釋放手柄 Safety Brake - Handle Release

產品規格表 **SPECIFICATIONS:**
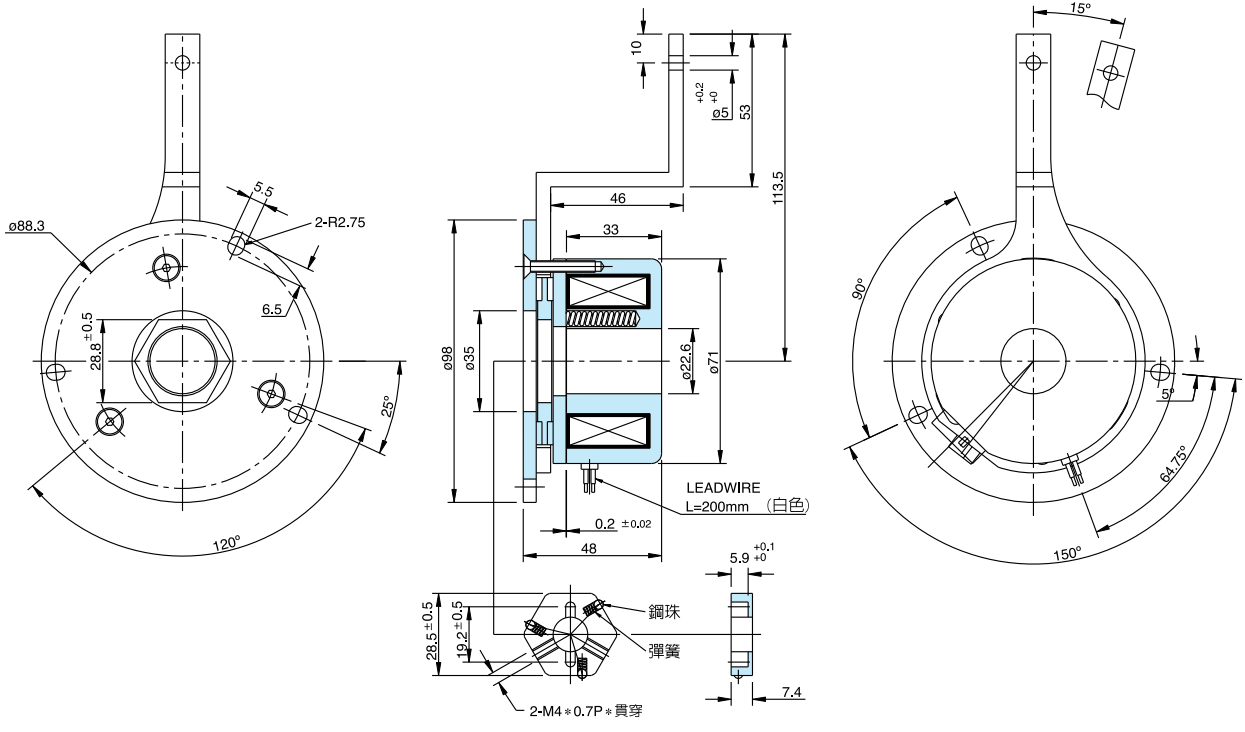
型號 Model	電壓D.C. Voltage	阻抗D.C. Resistance	功率 Power	絕緣等級 Insulation Classification	動摩擦轉距 Dynamic Friction Torque kgm(Nm)	靜摩擦轉距 Static Friction Torque kgm(Nm)	絕緣阻抗 Insulation Resistance	絕緣耐壓 Insulation Pressure Durability	作動電壓 Dynamic Voltage	間隙 (mm) Gap	重量 (kg) Weight
ALY001MA	24V	33.5Ω	16.3W	F	1.0(10)	1.1(11)	500VDC/50MΩ以上	1500V/1MA/1SEC	16V	0.15-0.2	1.1